Using GS10 AC Drives with AutomationDirect PLCs

Appendix

C

Table of Contents

Appendix C: Using GS10 AC Drives with AutomationDirect PLCs

Appendix C Overview C–2

Sinking/Sourcing Basics C–2

GS10-to-PLC I/O Wiring Examples C–4

Drive Wired with DC Sinking Inputs (PLC output card is sourcing) C–4

Drive Wired with DC Sourcing Inputs (PLC output card is sinking) C–4

Drive Wired with DC Sinking Outputs (PLC input card is sourcing) C–5

Drive Wired with DC Sourcing Outputs (PLC input card is sinking) C–5

Drive Relay Outputs Wired with Sinking PLC Modules C–6

Drive Relay Outputs Wired with Sourcing PLC Modules C–6

Drive Analog Inputs C–7

Analog Input Wired for Voltage and Current C–7

Drive Analog Outputs C–8

Analog Output Wired for Voltage and Current C–8

Appendix C Overview

The material presented here will help you connect your GS10 drive to an ADC PLC. The concepts and techniques used can also be applied to any 3rd party PLC.

There are two ways a PLC can control the drive; via communications or via physical inputs. The GS10 supports serial Modbus via the built-in RS-485 connections.

GS10 supports a variety of I/O on the main control board.

- *5 Sinking/sourcing DC inputs (includes 1 Hi-speed pulse input, 30V/30mA/33kHz max)*
- *1 Sinking/sourcing DC output*
- *1 Form C relay output (inductive load [cosØ 0.4] 1.2A [NO or NC] @ 250VAC)*
- *1 Analog input (0~10V, -10~10V, 0~20 mA, 4~20 mA)*
- *1 Analog output (0~10V, -10~10V, 4~20 mA)*

Sinking/Sourcing Basics

GS10 DC inputs and outputs can be sinking or sourcing, depending on how they are wired. If you understand the basics of how sinking and sourcing work, the two options can be easily applied.

- *For a detailed technical explanation of sink and source, please follow this link: www.automationdirect.com/static/specs/sinksource.pdf*

The term "sinking" means that the device "sinks" current into itself. It does not supply current. Sinking inputs are ON when you apply voltage (and thus, current) to them. A "sinking" device needs to have a "sourcing" device attached to it to supply current.

So, if the GS10 inputs are wired for sinking, they require the external device (FWD/STOP switch in this example) to supply current (when closed, the external device will "source" current). Notice the current flow represented by the red arrows. The GS10 input "sinks" the current flow.

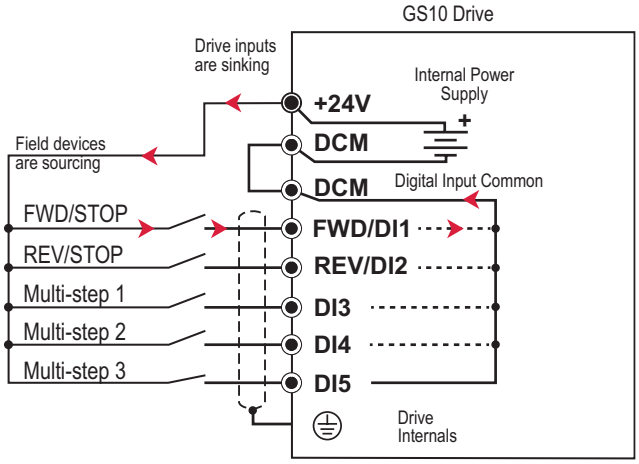

GS10 DC inputs can also be wired for sourcing. In this configuration, notice that the 24VDC supply is feeding into the DIC (Digital Input Common) terminal and the current is coming out of the drive input (GS10 is sourcing) and the field device is sinking the current.

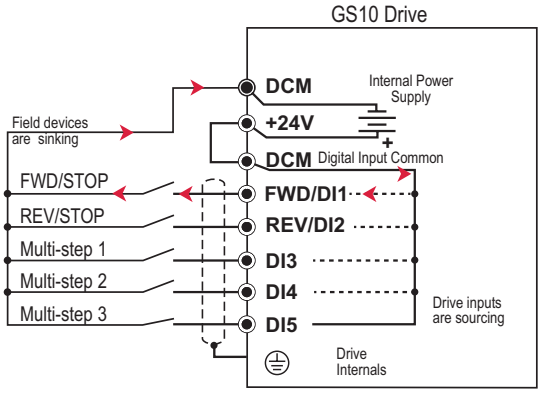

GS10 DC outputs can also be wired as sinking or sourcing. A sourcing output supplies current. This requires a device (pilot light, buzzer, PLC input card) that will sink the current. Notice how the electronics of the output allow current to flow out the DO1 terminal. The DOC (Digital Output Common) terminal is connected to +24VDC.

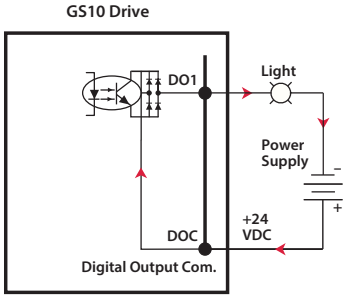

The same drive output circuit can be used to sink current. Notice below that the DOC terminal is now connected to the power supply common. The pilot light sources the current into the drive. The drive output sinks the current. (Even though the light has 24V on it at all times, it will not light up unless current is flowing through it and into the drive output).

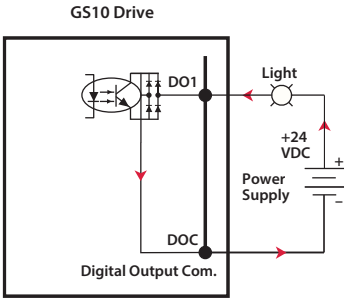

NOTE: GS10 output can be wired as sinking or sourcing, but not both at the same time.

GS10-to-PLC I/O Wiring Examples

This section shows typical wiring examples of PLC inputs and outputs connected to a GS10 drive. While we are using CLICK PLCs in the examples, the samples should be relevant to most PLCs. The terminal designation of other PLCs may be different, but the general connections should be the same (i.e. in the 1st example below, all PLC sourcing output modules will have a +VDC connection, a DC common terminal, and individual outputs). In the examples below, we make note of the typical connections involved. We also indicate current flow (with red arrows) to emphasize which modules are sourcing and which modules are sinking.

Drive Wired with DC Sinking Inputs (PLC output card is sourcing)

CLICK Expansion Module
C0-16TD2

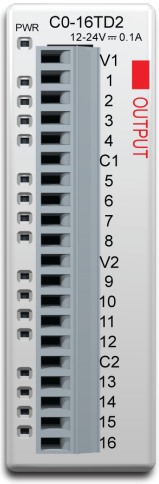

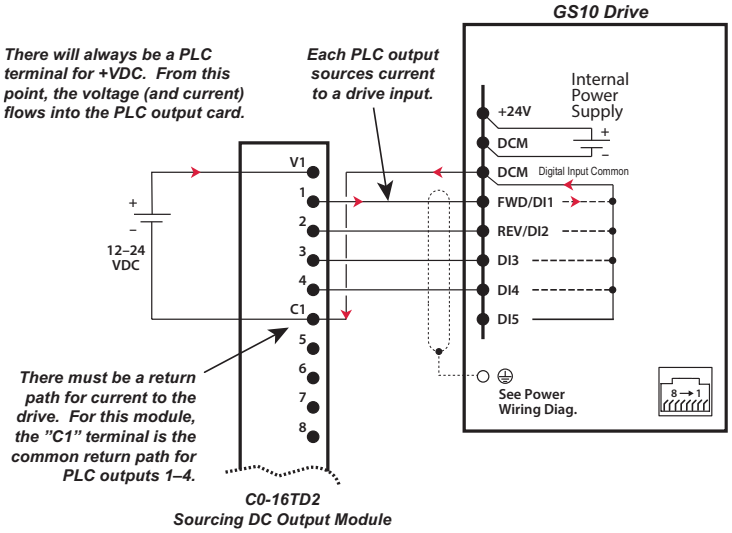

○ Main circuit (power) terminals ● Control circuit terminal ⫲ Shielded leads

Drive Wired with DC Sourcing Inputs (PLC output card is sinking)

CLICK Expansion Module
C0-16TD1

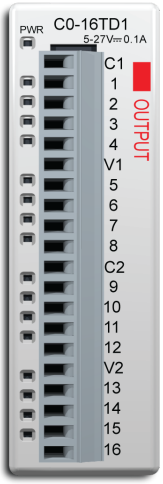

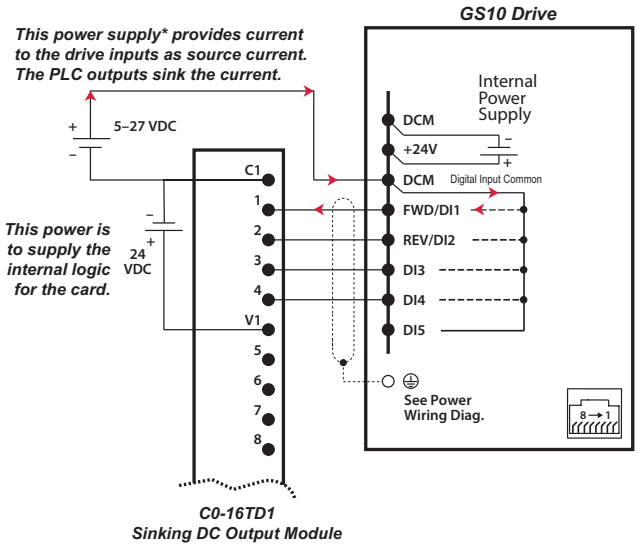

○ Main circuit (power) terminals ● Control circuit terminal ⫲ Shielded leads

**Alternately, the drive internal power supply (+24V) could be used. However, the DCM common would have to be connected to the PLC power supply common.*

Drive Wired with DC Sinking Outputs (PLC input card is sourcing)

CLICK Expansion Module
C0-16ND3

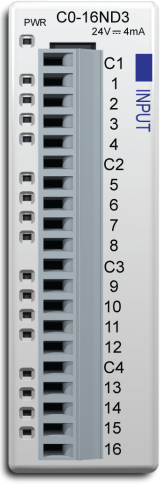

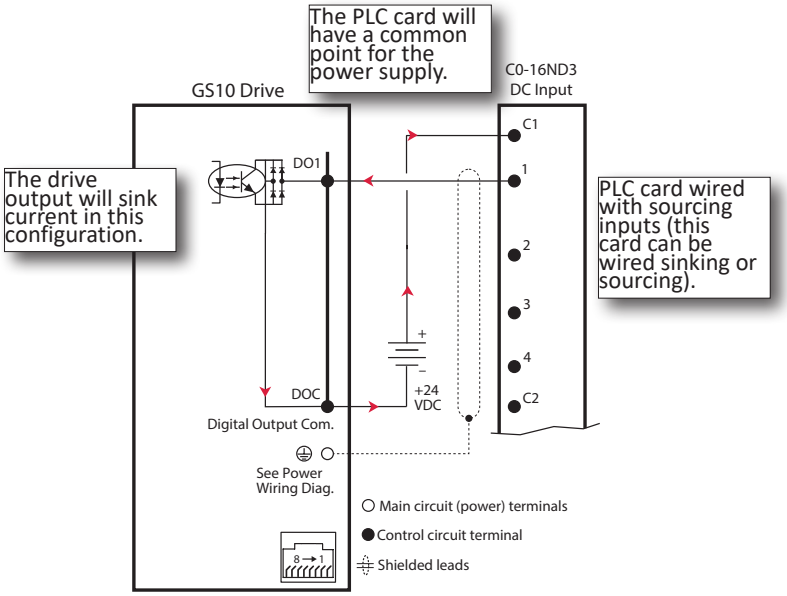

Drive Wired with DC Sourcing Outputs (PLC input card is sinking)

CLICK Expansion Module
C0-16ND3

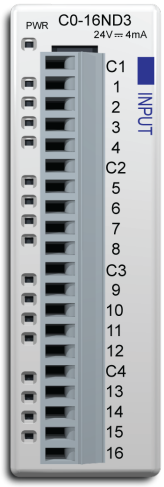

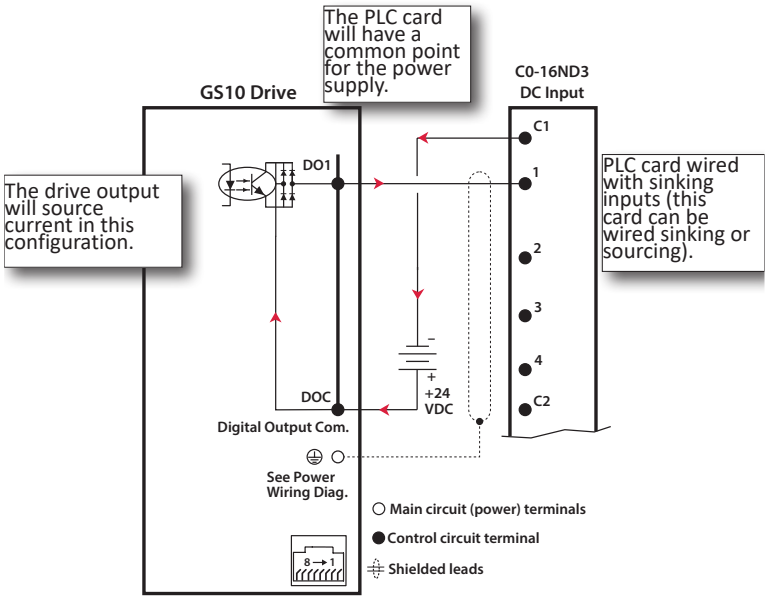

Drive Relay Outputs Wired with Sinking PLC Modules

In this example, the inputs are wired to the Normally-Open contacts (R1O). You could also wire to the Normally-Closed contacts (R1C), but you would not be able to tell if the drive lost power or if the drive outputs are simply OFF.

CLICK Expansion Module
C0-16ND3

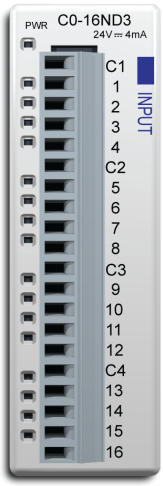

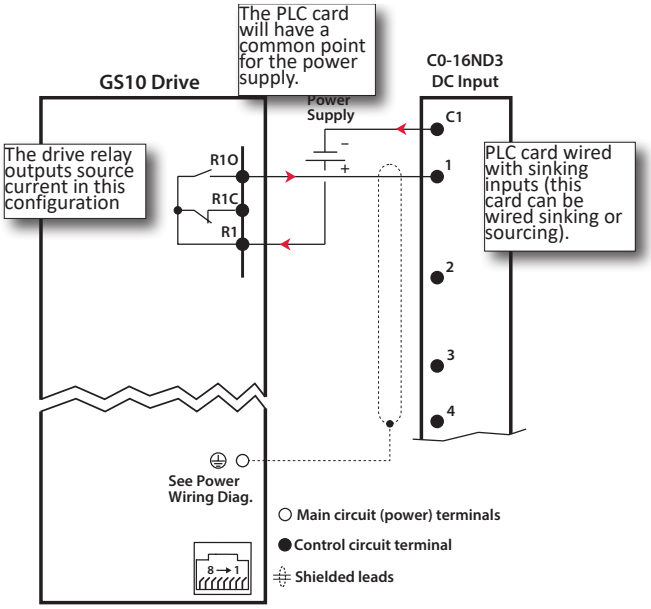

Drive Relay Outputs Wired with Sourcing PLC Modules

In this example, the inputs are wired to the Normally-Open contacts (R1O). You could also wire to the Normally-Closed contacts (R1C), but you would not be able to tell if the drive lost power or if the drive outputs are simply OFF.

CLICK Expansion Module
C0-16ND3

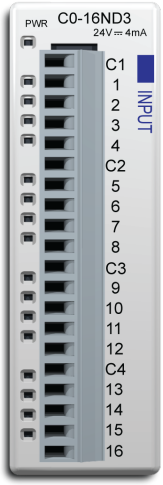

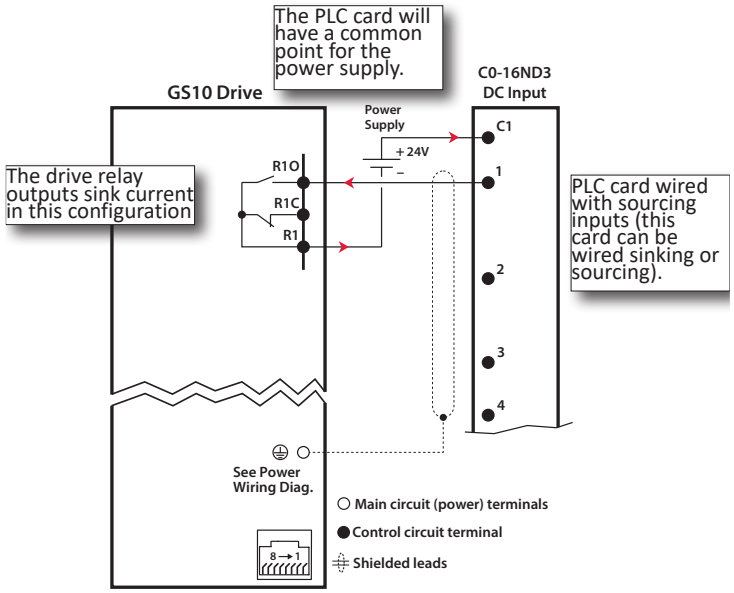

Drive Analog Inputs

The GS10 has 1 analog input (AI) that can be configured for a variety of input functions. AI must be configured via drive parameters group 3 and DIP switches. AI can be configured for voltage or current input. Both inputs have a variety of settings in Parameter Group 3 (P03.xx) that allows you to customize their scaling, offset, etc. based on voltage or current setting.

- *AI-V: 0~10V*
- *AI-C: 4~20 mA, 0~20 mA*

Connecting the analog input to PLC outputs is very straightforward.

NOTE: The GS10 AI analog input does not supply the current when configured for 0~20 mA or 4~20 mA (AI-C mode). The analog output device needs to supply the loop power.

Analog Input Wired for Voltage and Current

In this example, for the first drive AI is configured for 0~10V (P03.28=0, AI-V). For the second drive, AI is configured for 4~20 mA (P03.28=2, AI-C).

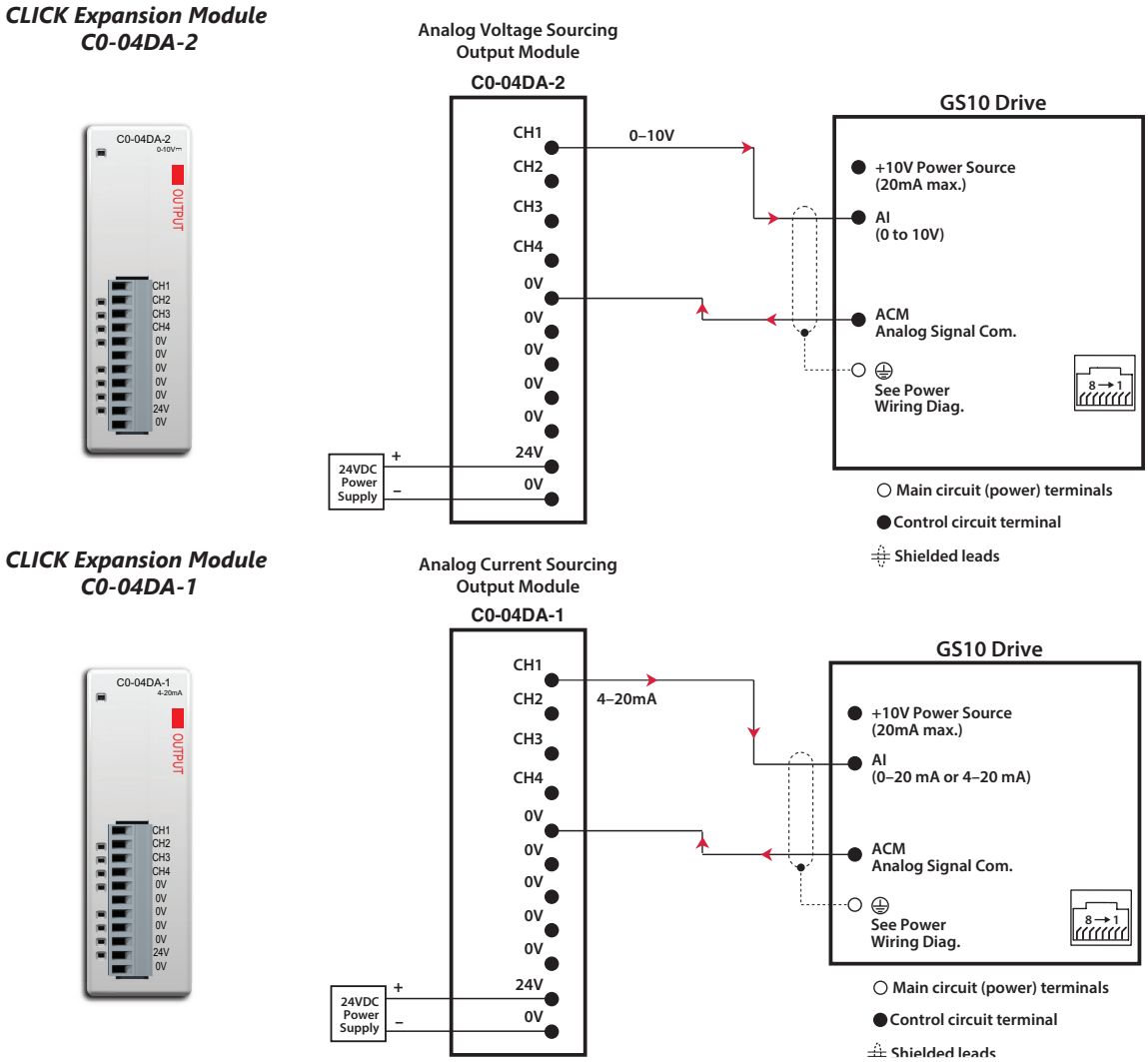

Drive Analog Outputs

The GS10 has one analog output (AO1) specified for 0-10V only. There are several parameters associated with the analog output that defines the signal and adjusts gain, offset, etc.

Analog Output Wired for Voltage and Current

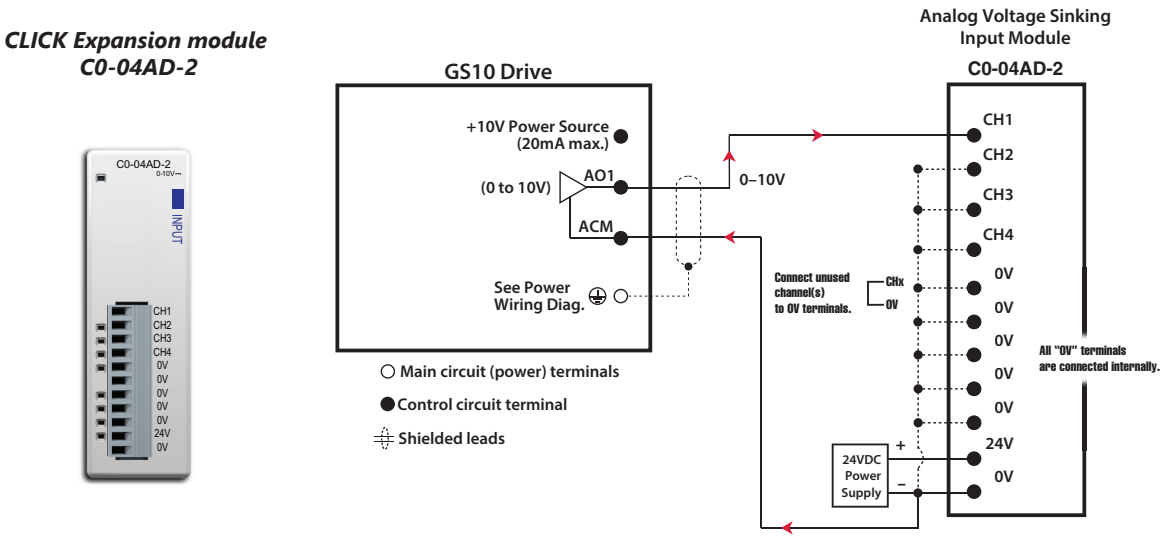
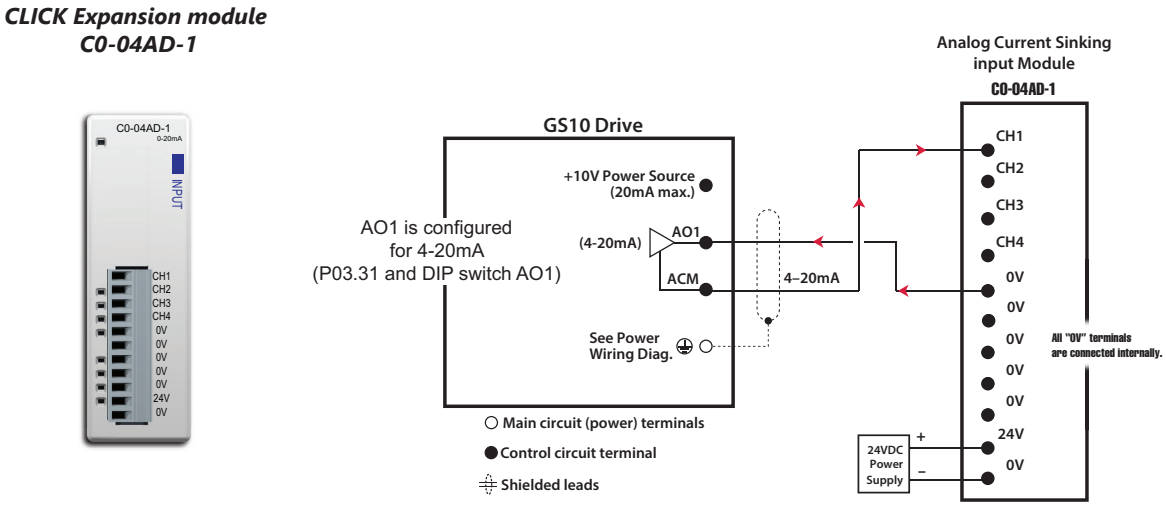
In this example AO1 is configured for current signal, 4-20mA (P03.31 and DIP switch AO1).